Avery Dennison
Label and Packaging Materials
Technical Guide

Europe
2023

Neck Label Application

AVERY DENNISON

Neck label range

In response to the growing demand for premium neck labels, particularly from champagne, prosecco, spumante, and cava Avery Dennison has decided to select a wide range of tested materials and provide technical recommendations to ensure successful applications for premium brands. There is constant growth in the sparkling wine market, so brands must find a solution to their neck label woes—after all, it is the only element of a bottle that is visible when immersed in a bucket and becomes the brand ambassador when not on the table. We're proud to address a common industry problem with this new cutting-edge range.

The neck label application process is often the Achilles heel for the demanding wine market. Our new collection ultimately offers brands in this industry a premium look and feel, a consistent final product image, and, most importantly, a high-end brand aesthetic with no risk of neck label detachments. Detailed below is our range of premium labeling materials, suitable for neck labels for wines and spirits, and sealing labels for craft beers.

Factors influencing neck label lifting

Neck labels that have been applied well and displayed no sign of lifting at the packaging stage might later show variable degrees of lifting. This is also referred to as 'winging'. To solve a problem, we need to understand what is causing it. Many factors can be responsible for neck label detachment and here are some common culprits to watch out for:

1. Incorrect use of materials

1.1 Facestock

A factor to consider is the "memory effect", which is when paper labels that are applied to curved surfaces, like bottle necks, tend to return to their original flat shape. This is caused by the way paper is manufactured. Challenges, such as contact with water and ice or condensation caused by temperature changes, increase the risk of detachment.

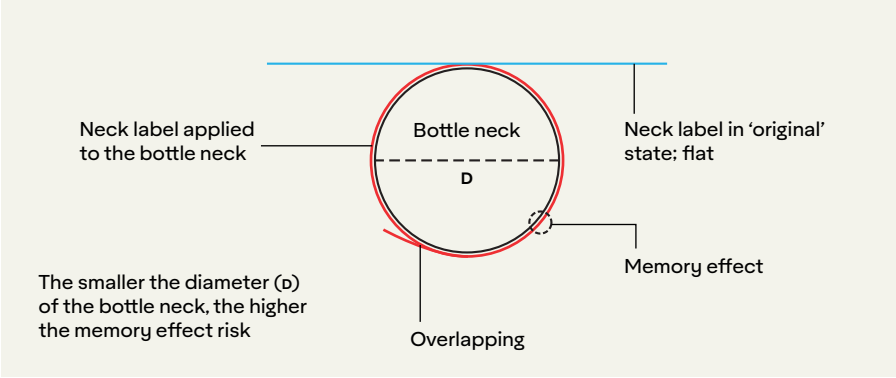

1.2 Adhesive

There are some adhesives that are better for neck label applications, while others are more likely to lift. Because one adhesive is conceived to offer good performance for a particular application, it doesn't mean the same is true for others. Label designers and manufacturers must understand the effect certain adhesives can have on label performance, and find one that prevents detachment from their intended applications.

2. Environment

2.1 Storage conditions

There are three key factors that contribute to neck label detachment issues when it comes to storage conditions:

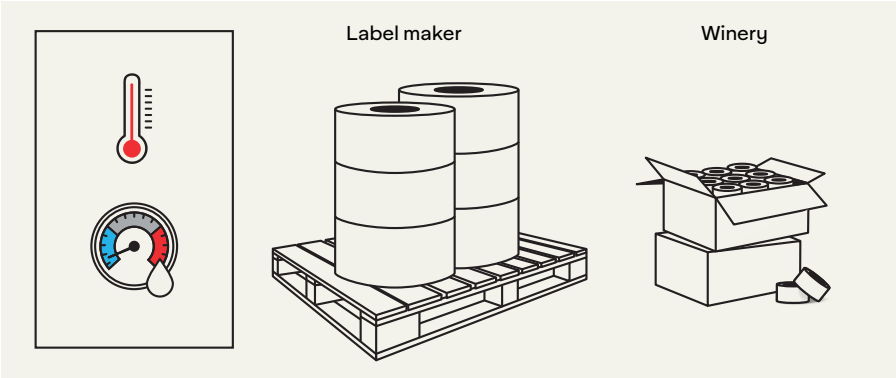

- **Stock conditions at the label manufacturer's warehouse** play a significant role in maintaining the initial adhesive characteristics. Especially temperature and humidity impact the adhesive performance of labeling materials stored in reels. Extreme temperature conditions or fluctuations can lower the adhesive quality, causing adhesives to detach.
- Label performance can also be affected by the **condition of the label reels in the winery warehouse before the labels are applied.** The materials used in creating the labels have already undergone stress during the printing and finishing process, and if they are not stored in ideal conditions, their adhesive quality may decrease, leading to detachment. Before applying wine labels to bottles, storing them in a controlled environment is important.
- Finally, labeling materials and **labels have an expiry date.** The adhesive performance of the materials and labels decreases over time, leading to detachment issues. Therefore, it is essential to ensure that the labels are used before expiration and stored in ideal conditions to prevent any loss of adhesive quality. Proper storage and timely usage of labeling materials can significantly reduce the occurrence of label detachment.

2.2 Moisture and Dust

Moisture and dust on the bottle's surface will also reduce the adhesive bond. For labels to perform effectively, brands must ensure that the surface on which they are applied is completely spotless and dry. Furthermore, the surface itself can often cause adhesion issues due to glass imperfections (convex and concave), so careful consideration must also be given to this factor.

3. Print inks and varnishes

Inks and varnishes used in the label print and embellishment process can cause neck labels to detach more easily due to chemical incompatibility, and/or mechanical stress that could make the label more rigid and increase the memory effect mentioned above. Therefore, when in doubt, label makers should run preliminary tests and or ask for our experts' support to make sure to use the inks and varnishes that do not impact the label substrate and its mechanical properties.

4. Label design

A great deal of attention should also be paid to unique shapes by label designers. Heavy embellishments like 3D silkscreen varnish can also increase the label's stiffness and compromise the adhesive bond. Similarly, too much embossing can reduce the label's adhesive surface, resulting in its detachment.

Heavy embellishments

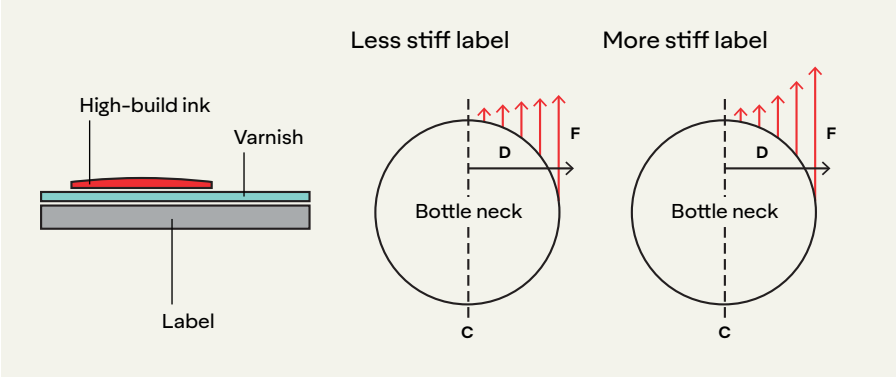

E.g.: 3D/heavy varnish can cause tension on the label and increases stiffness. This can impact adhesion wipe-down pressure. The impact of increased label stiffness will increase overall lift force (resistance to bend). This is expected to increase with distance (D) from the centre point of the label (C), and is greatest at the label edge.

5. Label application process and technology

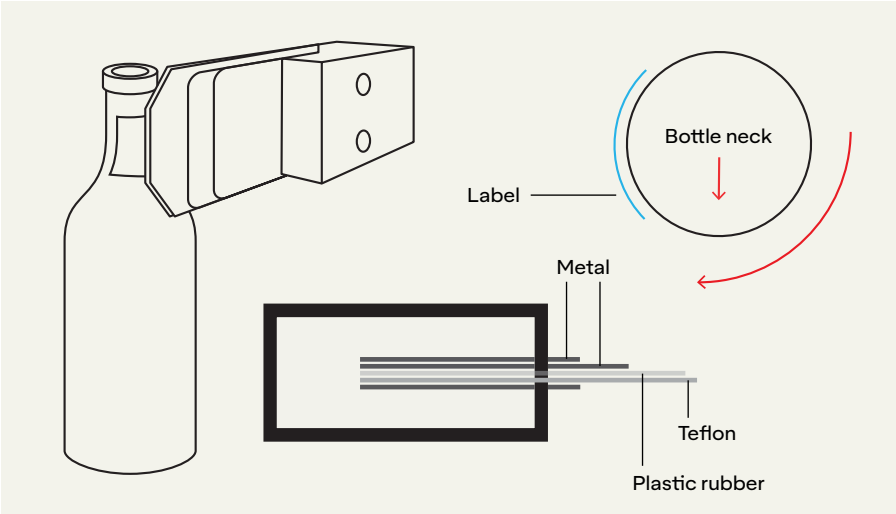

Pressure during the application on the labeling machine also plays a role in neck label detachments. It is important to set labeling machines to apply the labels with enough pressure on the bottleneck, as not enough tension can result in the labels not being applied properly and the adhesive losing its stickiness.

Outdated solutions

Brands seeking aesthetically pleasing, eco-friendly, and high-performing neck labels have yet to find suitable solutions on the market. Some of the current options include the use of defibrated papers or printing on papers with reduced grammage to decrease the memory effect. However, these solutions negatively impact the packaging's aesthetic appeal and do not provide a coherent, uniform look between the front and neck labels, which are often printed on a different type of paper and do not have the premium appearance of the front label.
To compensate for this, designers often add embellishments, which affect the packaging's overall aesthetic balance and eco-friendly nature. The reality is, however, that papers with a reduced grammage cannot match the quality of front-label papers since the texture is affected when pulp fiber quantity is reduced.

Our groundbreaking solutions

Our adhesives solve these problems and offer the opportunity to create a fully coordinated product image. With Avery Dennison's innovations, brands, designers, and label manufacturers can now use the same material for both their products' neck and front labels. Additionally, the range includes materials made from 100% recycled pulp, and some featuring the AD rPET liner. With AD Circular, our recycling program that helps brands divert liner waste from landfills, brands can take positive steps towards a more sustainable future.

Furthermore, our solutions offer more cost-effective and logistically efficient options. Manufacturers can reduce warehouse costs by using the same material for both the front and neck labels, as they don't need to store separate materials for each label type. Since neck labels are smaller than front labels, they risk expiring on the manufacturer's warehouse shelves. However, our new range overcomes this issue by offering a versatile, long-lasting solution. Using the same material for both labels, brands, and designers can create limited editions without being forced to buy additional, specific materials.

Overall, Avery Dennison's neck label solutions offer more convenience and flexibility to label manufacturers and brands alike, making it an ideal choice for those looking to streamline their operations, save costs and create a cohesive, premium image.

Product Recommendation
Adhesive: S2030

Facestock Type	Facestock
Uncoated	Fasson® rSable Blanc FSC®, Fasson® rNoble Blanc FSC®, Fasson® Artisan Blanc FSC®, Fasson® Rustique Blanc FSC®, Fasson® Super White Opaque FSC®, Fasson® Martele Blanc FSC®, Fasson® Paper New Black FSC®, Fasson® Paper Watermark 90 FSC®*
Coated	Fasson® Matt Wine FSC®, Fasson® Matt Wine Black FSC®, Fasson® rMC 100% FSC®, Fasson® High Gloss Wine FSC®, Fasson® High Gloss Wine Perle FSC®, Fasson® Frozen Quartz FSC®, Fasson® Frozen Orion Diamond FSC®
Metallized Paper and foils	Fasson® MP Plus Silver FSC®
Film	Fasson® PE 120 Top White, Fasson® PE 150 Top White

*Remember to watch out for papers with higher grammage. We recommend label makers run preliminary tests and or ask for our experts' technical support.

Summary

In summary, Avery Dennison offers comprehensive solutions to the problem of neck label detachment. With the increasing demand for packaging premiumization and consumers seeking aesthetically pleasing products on shelves, our collection of tested materials and technical expertise offers brands and designers the necessary information to ensure successful neck label applications—meaning you won't be left in a sticky situation.

Moreover, we offer pre and post-sales assistance to brands and their designers in resolving this pressing problem by providing expert technical guidance and material recommendations that will support them in establishing a premium image and thereby improving the overall experience for their customers.

DISCLAIMER — Avery Dennison provides a general guideline for improving neck label performance. However, due to variations in primers, inks, embellishments, etc., Avery Dennison cannot guarantee the neck label's performance under every circumstance. In case of doubts, we can provide support to verify the compatibility of specific designs with neck labels.

Let's talk.

Visit my-muse.com or Instagram @m_uselive for more label inspiration.

If you would like more information about the products mentioned above, or if you want to know how we can assist with your neck label applications, please get in touch with Janice Chang, Jr. Product Manager Premium Solution, Avery Dennison — janice.chang@eu.averydennison.com

Alternatively, you can contact Janice directly by scanning the QR code below.

Ask for our FSC®-certified products

FSC
www.fsc.org
FSC® C004451
The mark of responsible forestry

label.averydennison.com

For more information on technical performance and printing recommendations, please refer to the respective datasheets. Please note that the Avery Dennison product range and service offering can be subject to changes. For an accurate overview, please check our website label.averydennison.eu or contact your local Avery Dennison sales representative.

DISCLAIMER — © 2023 Avery Dennison Corporation. All rights reserved. Avery Dennison and all other Avery Dennison brands, this publication, its content, product names and codes are owned by Avery Dennison Corporation. All other brands and product names are trademarks of their respective owners. This publication must not be used, copied or reproduced in whole or in part for any purposes other than marketing by Avery Dennison. All Avery Dennison statements, technical information and recommendations are based on tests believed to be reliable but do not constitute a guarantee or warranty. All Avery Dennison products are sold with the understanding that purchaser has independently determined the suitability of such products for its purposes. All Avery Dennison's products are sold subject to Avery Dennison's general terms and conditions of sale, see terms.europe.averydennison.com.

AVERY DENNISON